Online monitoring system for KamLAND

Tohoku University,RCNS

Masakazu MOTOKI
KamLAND Collaboration

Contents

KamLAND

Kamioka Liquid scintillator Anti Neutrino Detector

1,000 ton liquid scintillator neutrino detector located at the former site of Kamiokande

1st phase experiment
(E_{th} = 1.8 MeV)
$\bar{\nu}_e + p \rightarrow e^+ + n$

○ Neutrino Oscillation Search by Reactor Anti-neutrinos

175 km

$\bar{\nu}_e$

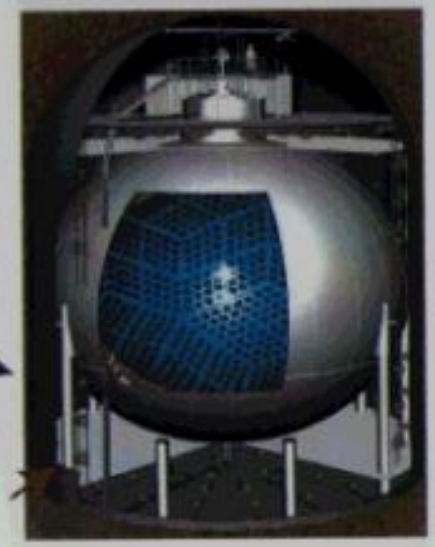

2nd phase experiment
(E_{th} = 200 keV)
$\nu_e + e^- \rightarrow \nu_e + e^-$

○ Solar neutrino Detection

^{7}Be Neutrino

ν_e

- **Reactor Anti Neutrino Source.**
- **Energy distortion, LMA**
- **^{7}Be neutrinos.**
- **Geo neutrinos.**

Mt.Ikenoyama

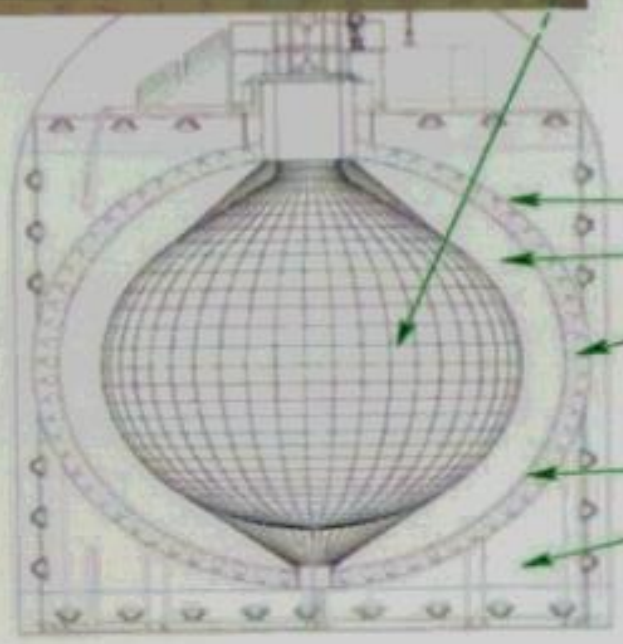

KamLAND Detector

1000 ton liquid scintillator

80% dodecane, 20% pseudocumene,
1.52 g/l PPO (ρ = 0.78 g/cm^3)

housed in spherical balloon(diam.13m)
transparent EVOH/Nylon/EVOH
composite film (135μ m)
supported by a network of kevlar ropes

1800 m^3 Buffer Oil

18m diameter stainless steel tank filled wit
paraffin oil ($\Delta\rho$ = 0.04% lighter than LS)

1,325 17–inch + 554 20–inch PMTs
photocathode coverage ~ 34%
(present analysis ~22% only 17–inch)

3mm thick acrylic barrier for Rn emanation

Water Cherenkov Outer Detector

225 20–inch PMTs

Front-End Electronics

threshold 0.5mV
1/3p.e.

Nsum

Primary Trigger
200hits (~0.75MeV)
Delayed Trigger
120hits (~425KeV)
for 1 msec after primary trigger

PMT
$5x10^6$ gain

Esum

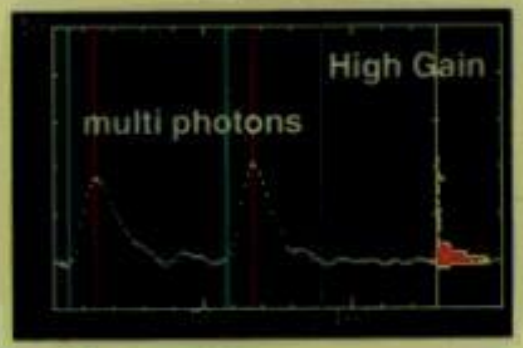

40nsec delay

x20 High gain

x4 Medium gain

x1/2 Low gain

ATWD A

ATWD B

ATWD
128x3 analog buffer + fast ADC

PMT signal

1 5
2 6
3 7
4 8

capture gate

121 125
122 126
123 127
124 128

sliding capture window
with 1.49ns step
and 1.49x4ns window

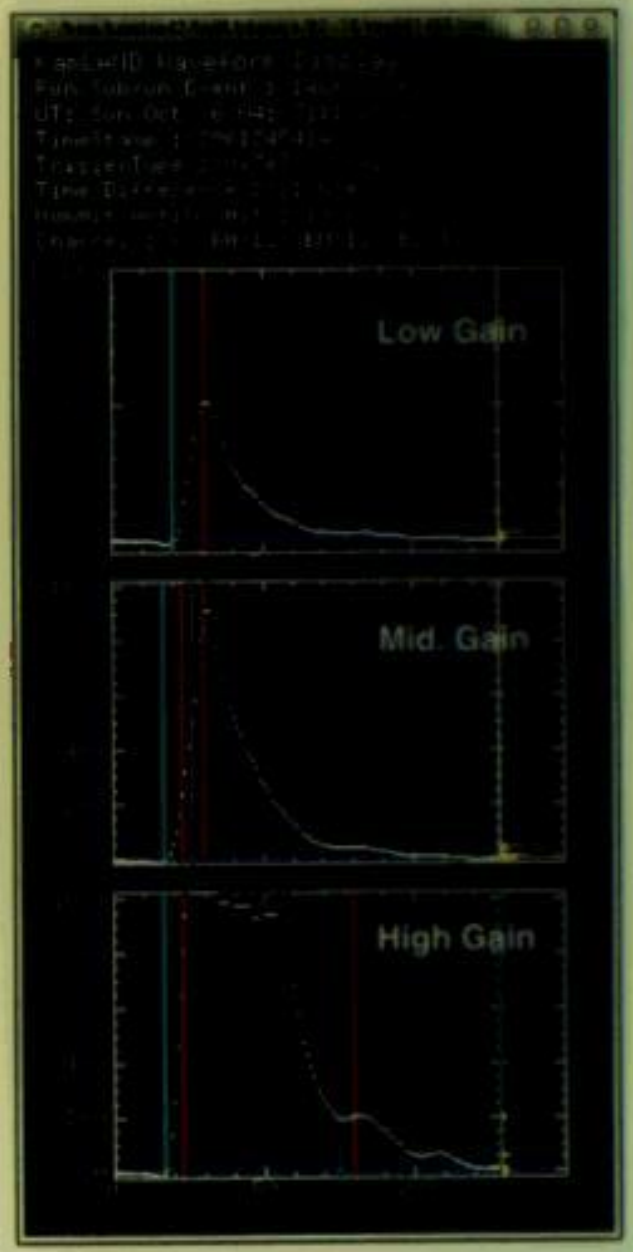

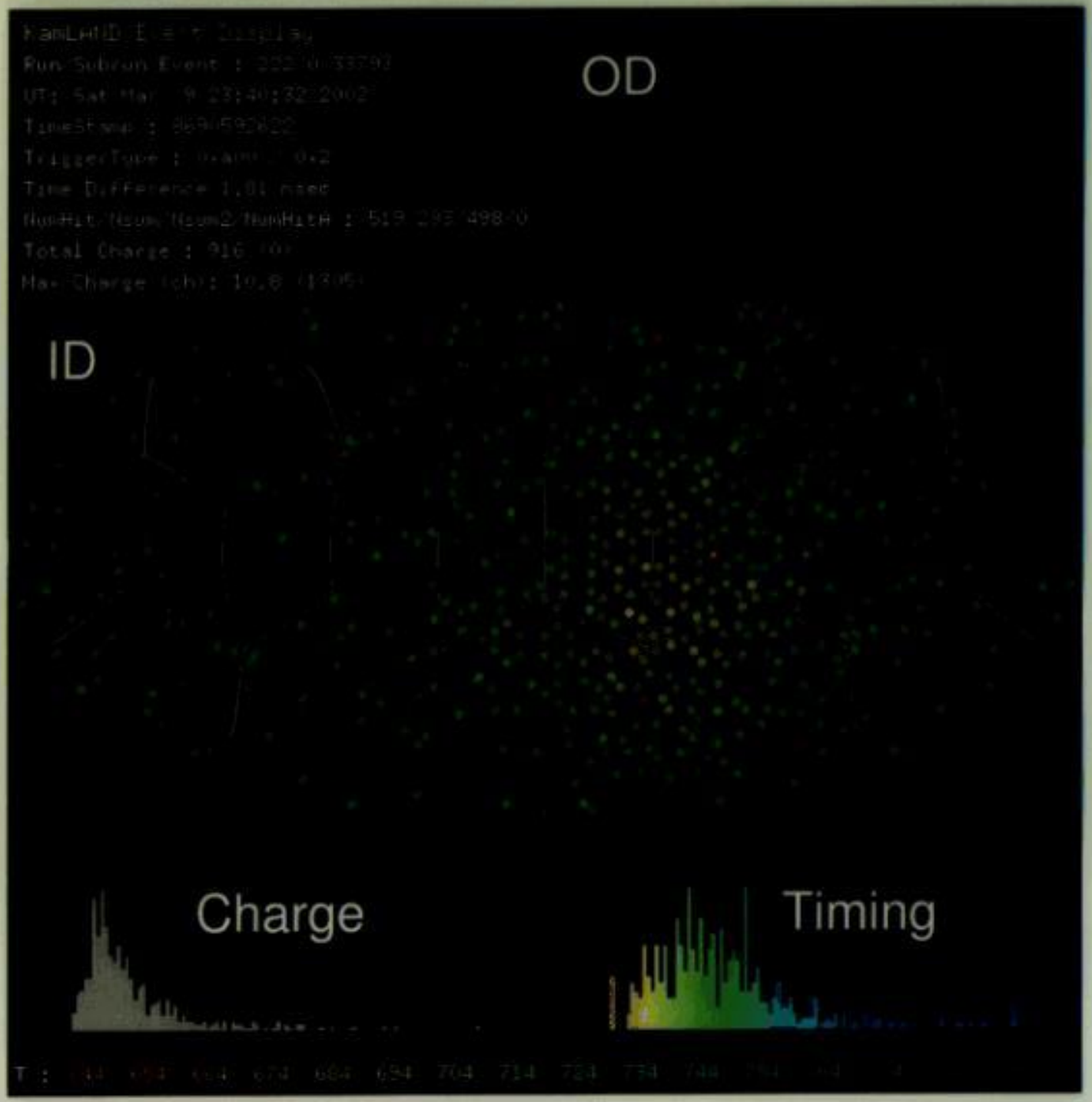
OD
ID
Charge
Timing

LON Monitoring System

- KamLAND detector is Complicated system.
- We need to monitor the detector status such as ball oon weight, liquid scintillator temperature.
- The work of the shift handily and surely.
- Emergency data log for cause investigation when a ccident happens
- The stability of the system is needed.
  - > > > > > > > > > > > > >
- The system which used the LON protocol was cons tructed.
- It is possible to observe it from anywhere by way of TCP/IP by the connection with PC.

Neuron Chip

- The Features are;
  - Incorporation of the communication program in the Neuron Chip as firmware
  - Neuron C language, a special version of the C progr amming language, is used to develop application pr ogram.
  - The Neuron Chip has eleven I/O ports which are eq uipped with the firmware programmable function I/O facility.These I/O ports are used to take monitor dat a.

LON Network

- LON protocol
  - Each Neuron Chip Node are binded via LON protocol Network.
  - Maximun communication distance is 1.4 km covering whole KamLAND area.
  - Total distance of LON network in this Figure is 400 m.
- TCP/IP
  - LON Monitoring System are controled even from Sendai via TCP/IP by using PC interface node.

KamLAND Area and Monitoring Network

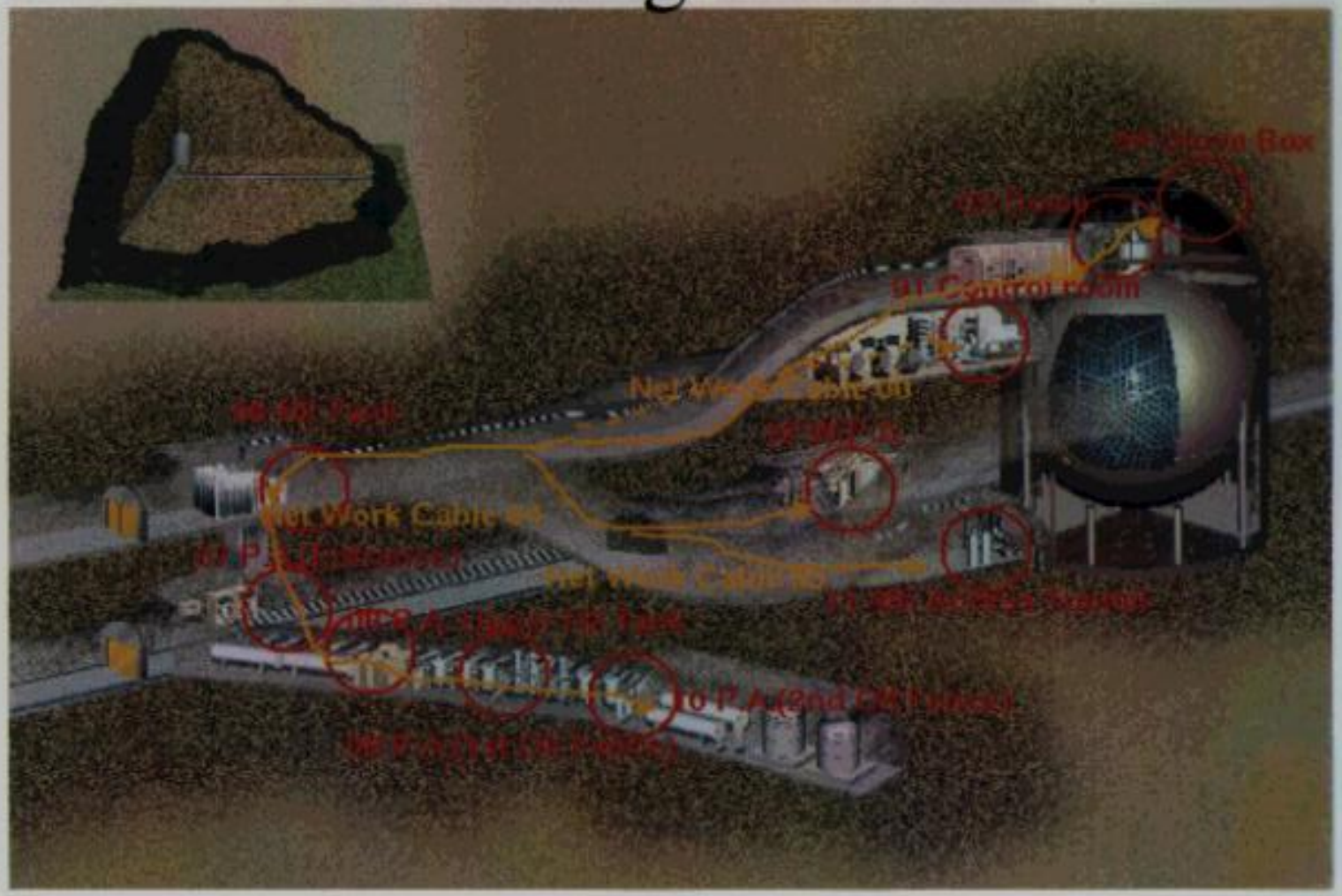

KamLAND Area and Monitoring Network

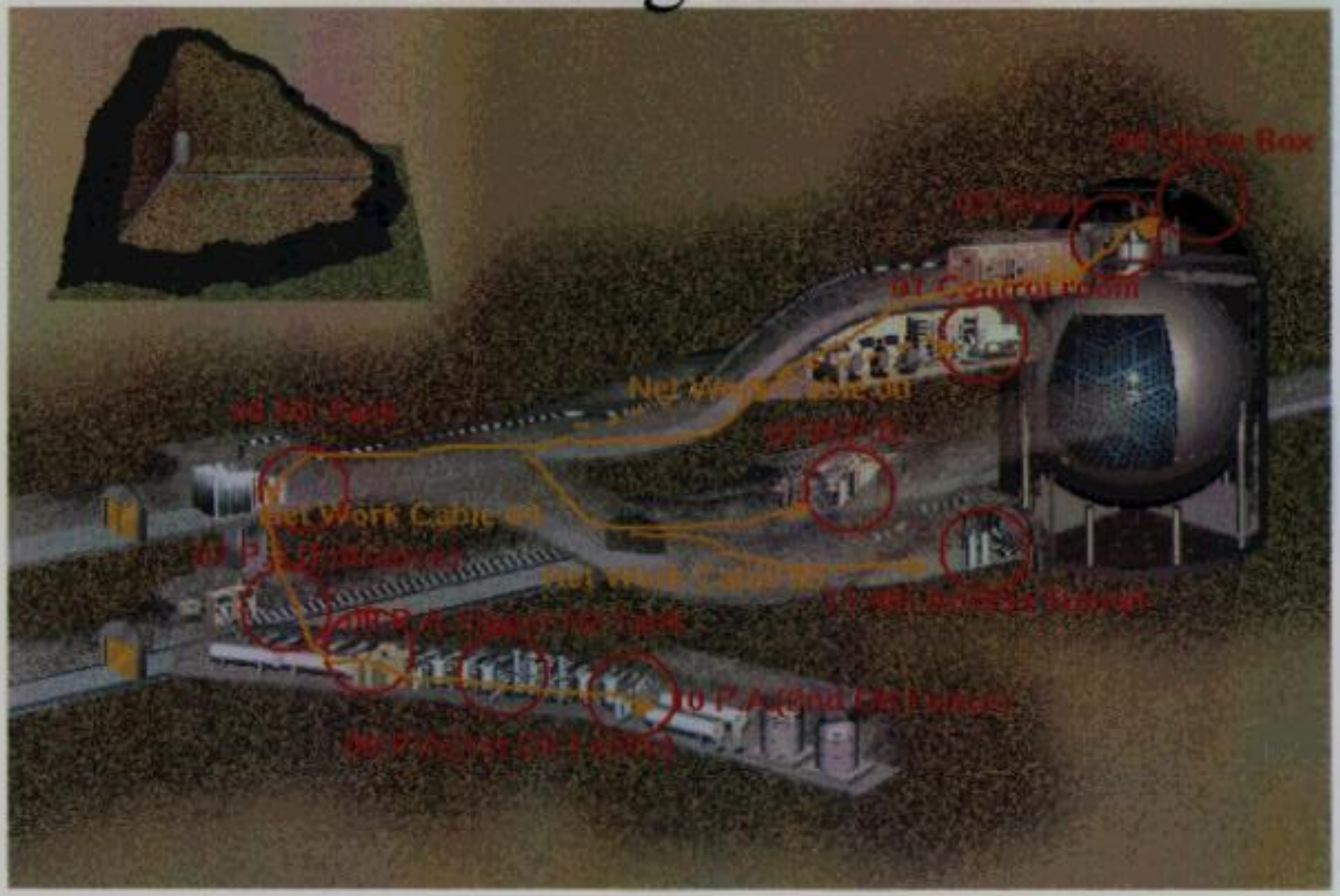

ADC Node

- Maximum 4096 ch/system (Now 120 ch)
- 12 bit dynamic range
- ADC Nodes are set in dome, clean room, purification syst em and water purification system.
- Sensor data, load cell, temperature, pressure, oil flow rat e, etc. are taken by these node.
- Application program on EPROM that are attached to Neur on Chip sends command to each ADC to gather monitor d ata.
- ADC receives data from each amplifier according to the re ceived command. Then Neuron Chip send these data to P C I/F Node via LON Network.

ADC Node

ADC Node

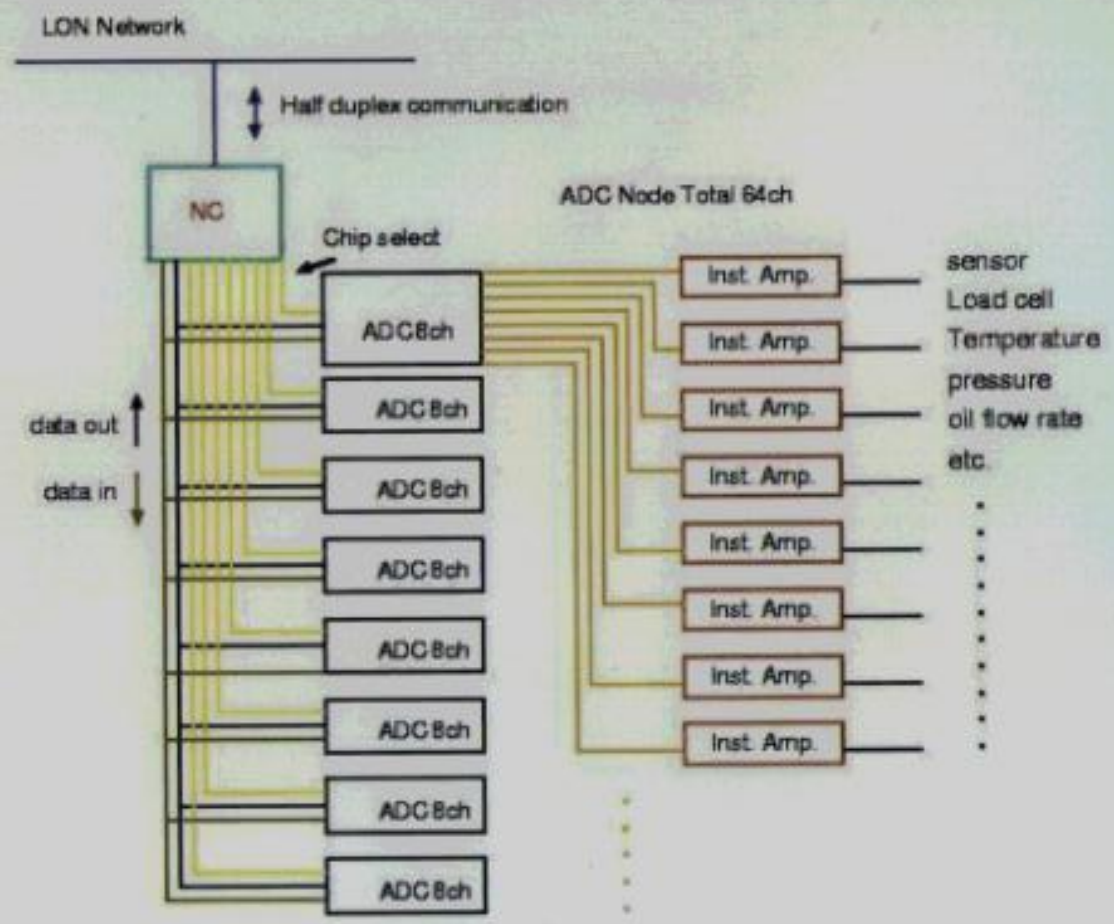

LON PC I/F node

- All the ADC Node data are sent to PC I/F Node , in order to store monitor data in PC.
- Data flow rate is 78 kbps on LON network and 116 kbps on serial network.
- The features of PC I/F Node are
  - Data format transformation
  - Command transaction
- These process are executed by application program in Neuron chip.
- UART (Universal Asynchronous Receiver/Transmitter) makes it possible to communicate fast with PC via serial port.

LON PC I/F Node

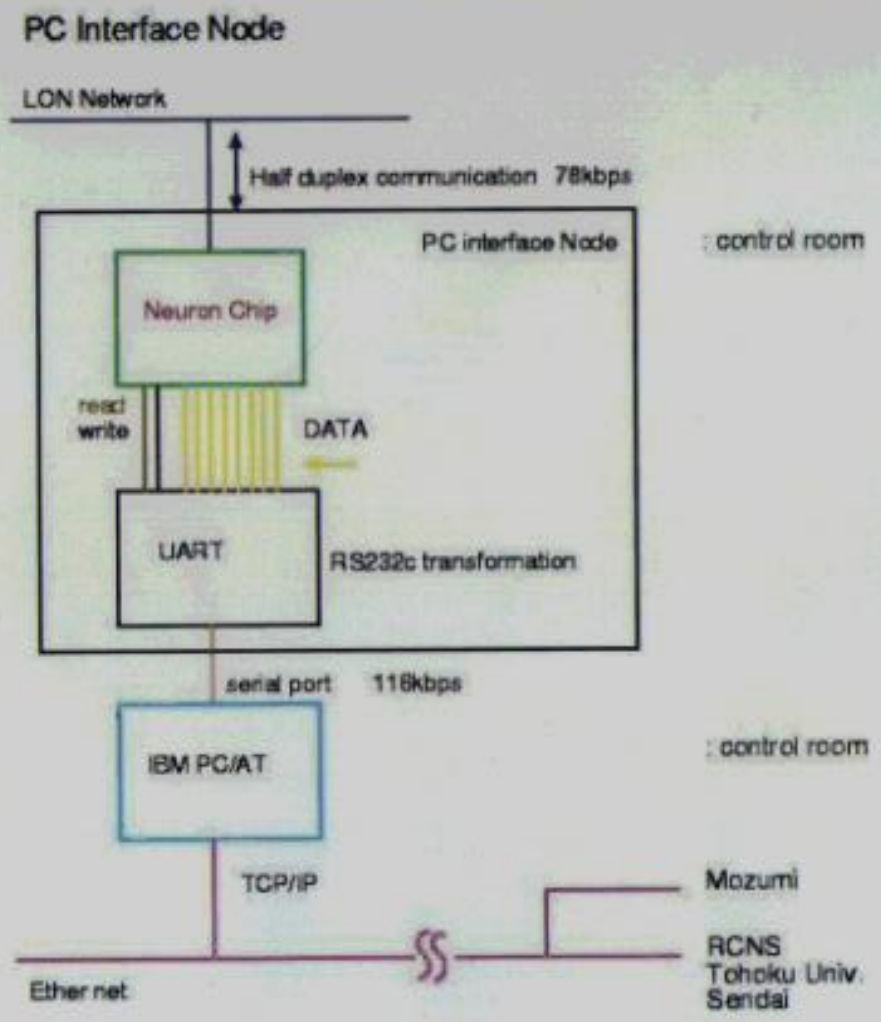

LON Monitor

- Each node has microc ontroller
  -Neuron chip-
- Max 64 ADC ch/node

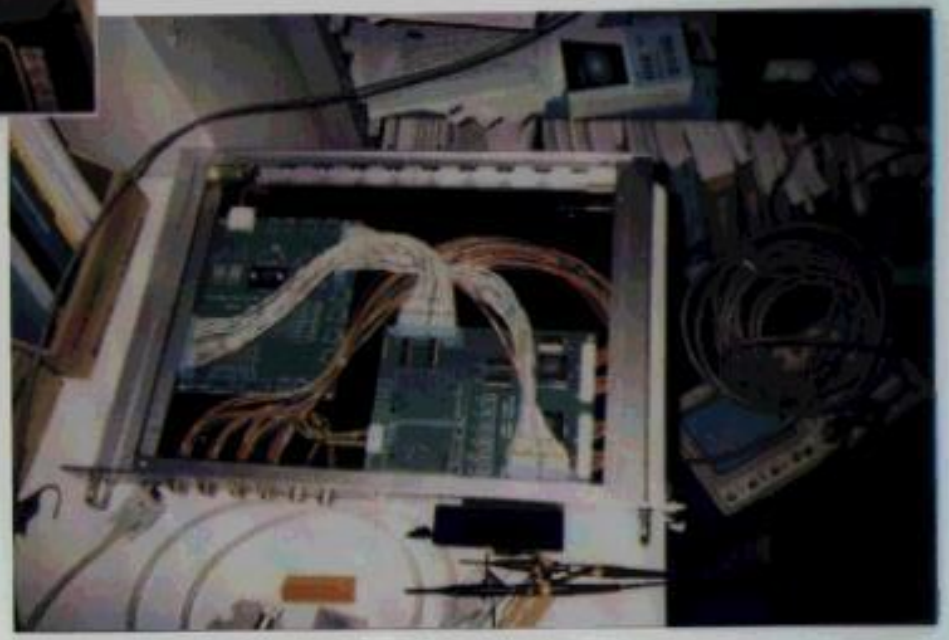

- PC I/F Node
- Neuron chip
- LON-RS232c

DAQ System

- Monitor data are stored in PC put in the control room.
- Real time task on the real time linux is used to gather mon itor data. This Real time task also execute command trans action.
- Real time task is waked up by handler, and this command was send from user process 1. User process 1 is also use d to send command to each Neuron Chip.
- When user process 1 send command to user process 2 in order to store monitor data, user process 2 starts to store monitor data.
- Command can be send even from anywhere via TCP/IP.

Slow Control Monitor DAQ

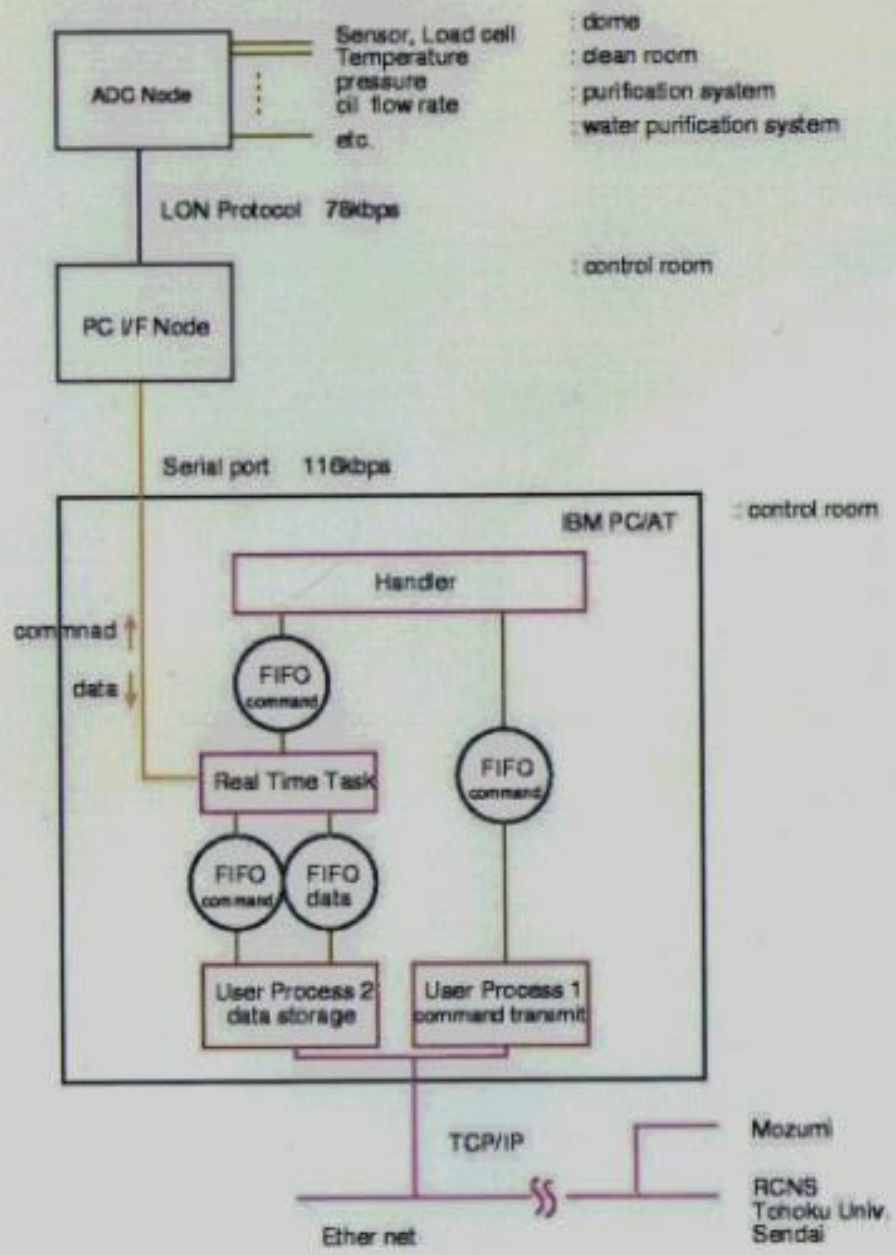

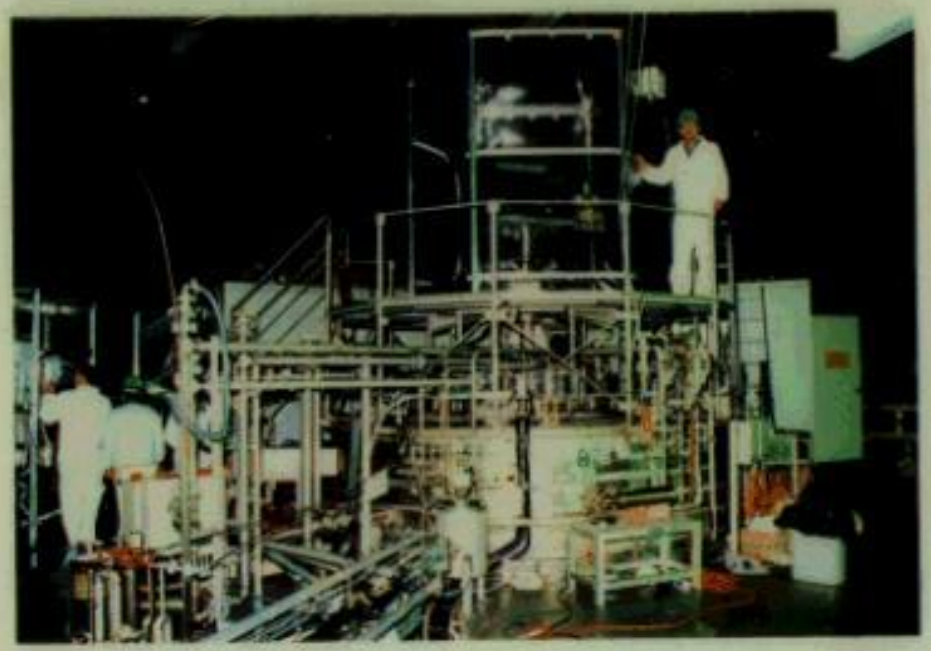

Dome Area.

- Load Cell 1~44
- temperature (Balloon) ×3
- " (Outer Bofer) ×4
- " (Inner Buffer) ×3
- Oxygen Monitor (LS) 1
- Oxygen Monitor (BO) 1
- differential Pressure (LS-BOI)
- " (LS-Dome)
- " (BO-Dome)
- Dome Temperature
- Dome Pressure.
- Anti Water Pressure ×2.
- Nitrogen Valve Status.
- Detector LS level
- " Inner BO "
- " Outer BO "

Purification Area.

- $10m^3$ LS Buffer tank Oil level.
- $1m^3$ " " "
- LS filter Out differential Pressure.
- LS filter In differential Pressure.
- LS Nitrogen Supply tank Pressure.

- MO $15m^3$ Buffer tank Oil level.
- $1m^3$ MO " "
- MO filter Out differential Pressure.
- MO filter In differential Pressure.
- MO Nitrogen Supply Tank Pressure.
- Oxigen Monitor x2.
- Frammable gas Monitor.

- LS $20m^3$ tank Level.
- BO $20m^3$ tank Level.
- Detector LS level.
- " Inner BO level
- " Outer BO level.

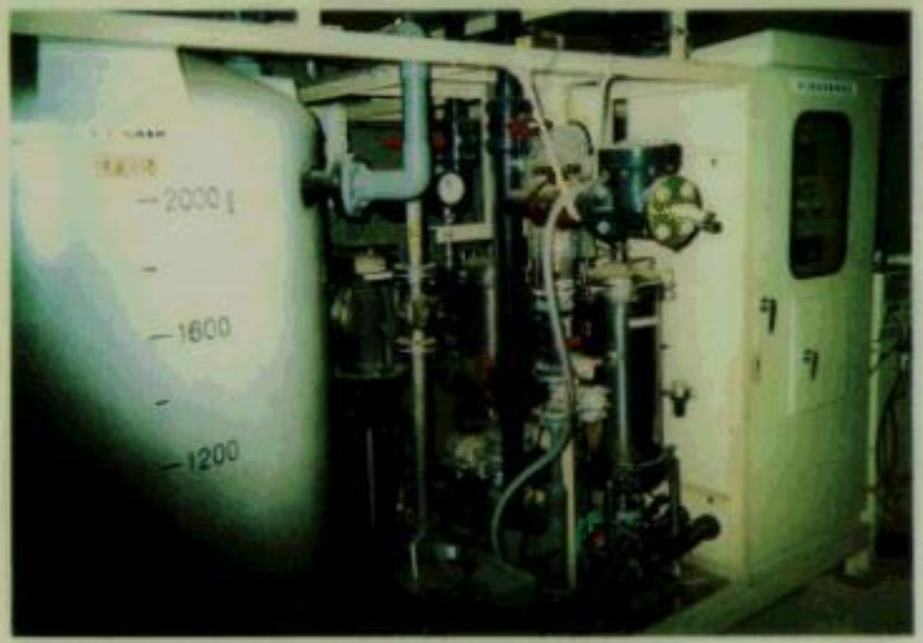

Water Purification Area

- Final Filter Out Electric conductivity.
- RO Out " "
- Cooling Heat exchang machine Out Temperature.

4th Access Tunnel.

- Differential Pressure LS-BO
- Detector Bottom LS Pressure.
- Detector Bottom LS Flow rate
- " " Inner BO " "
- " " Outer BO " "

Mineral Oil Temperature

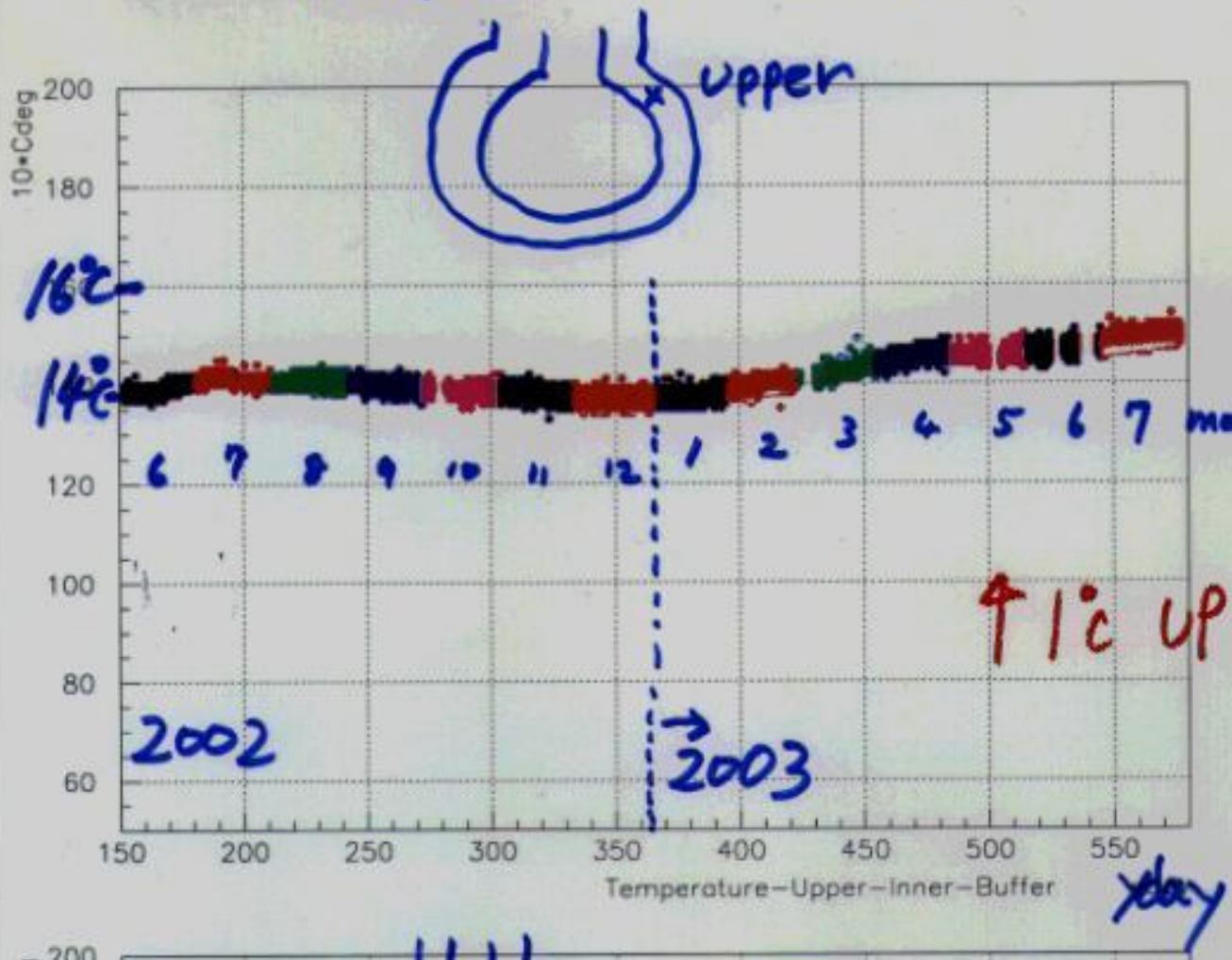

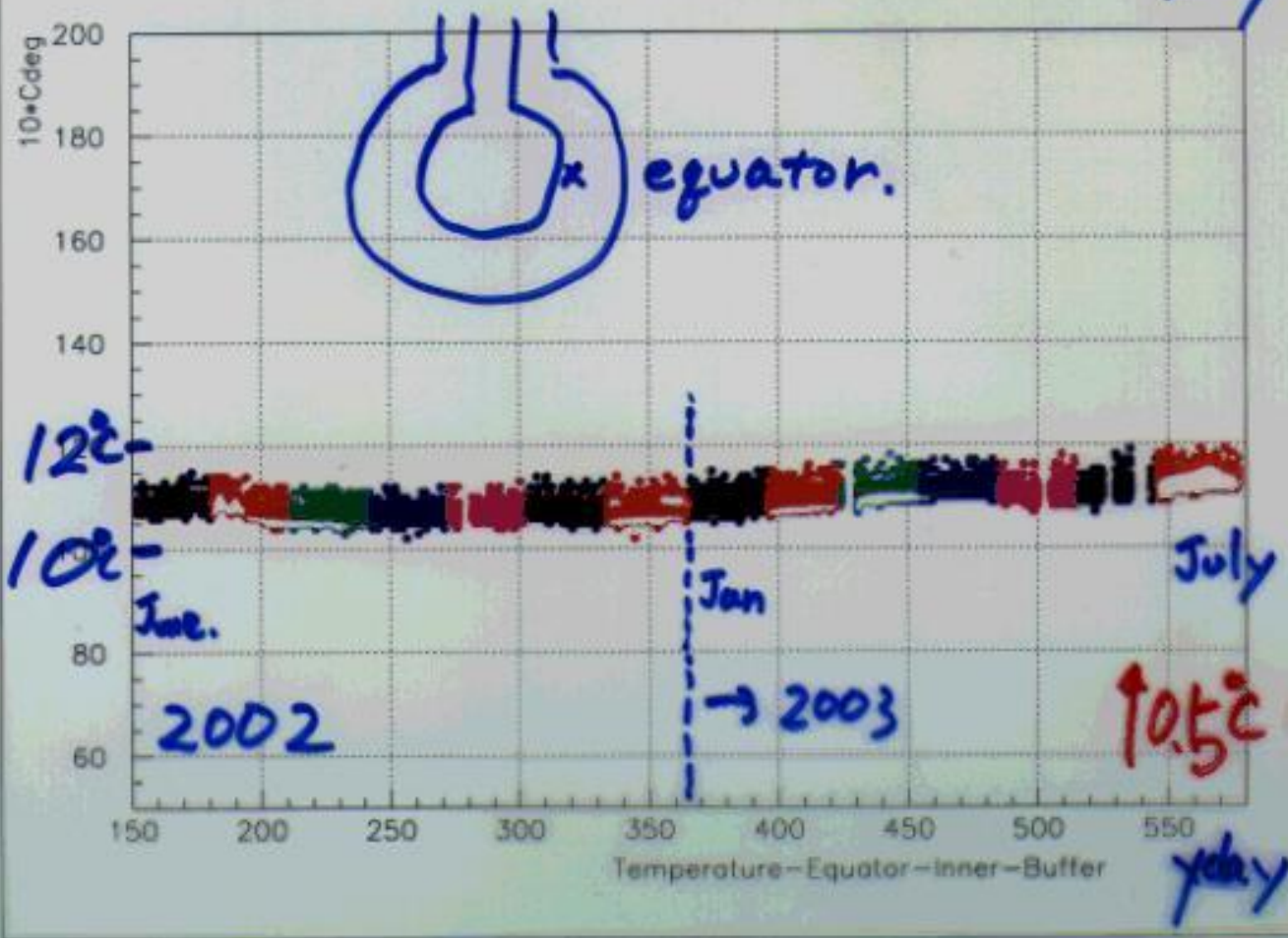

LS, Mo Oil Level.

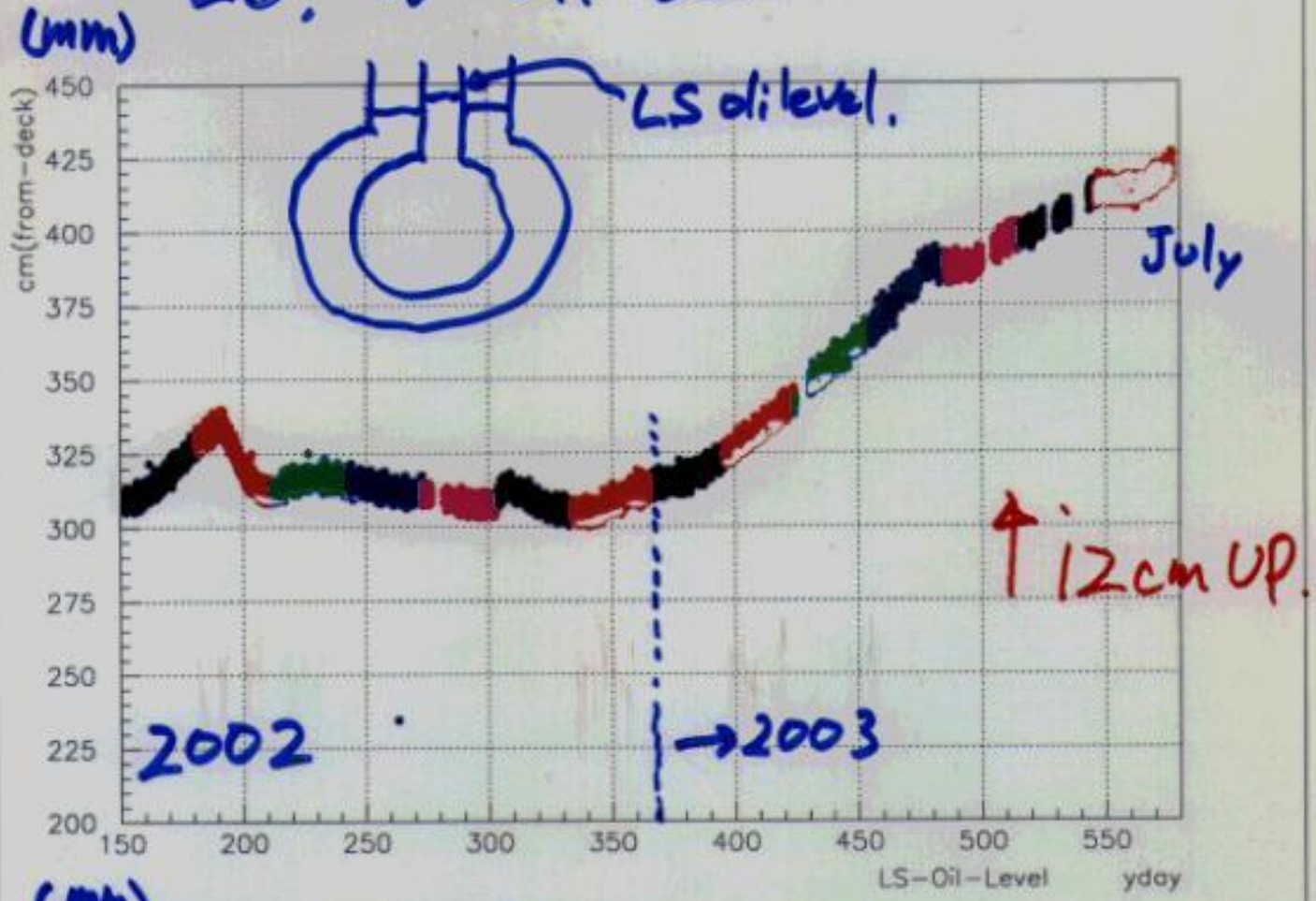

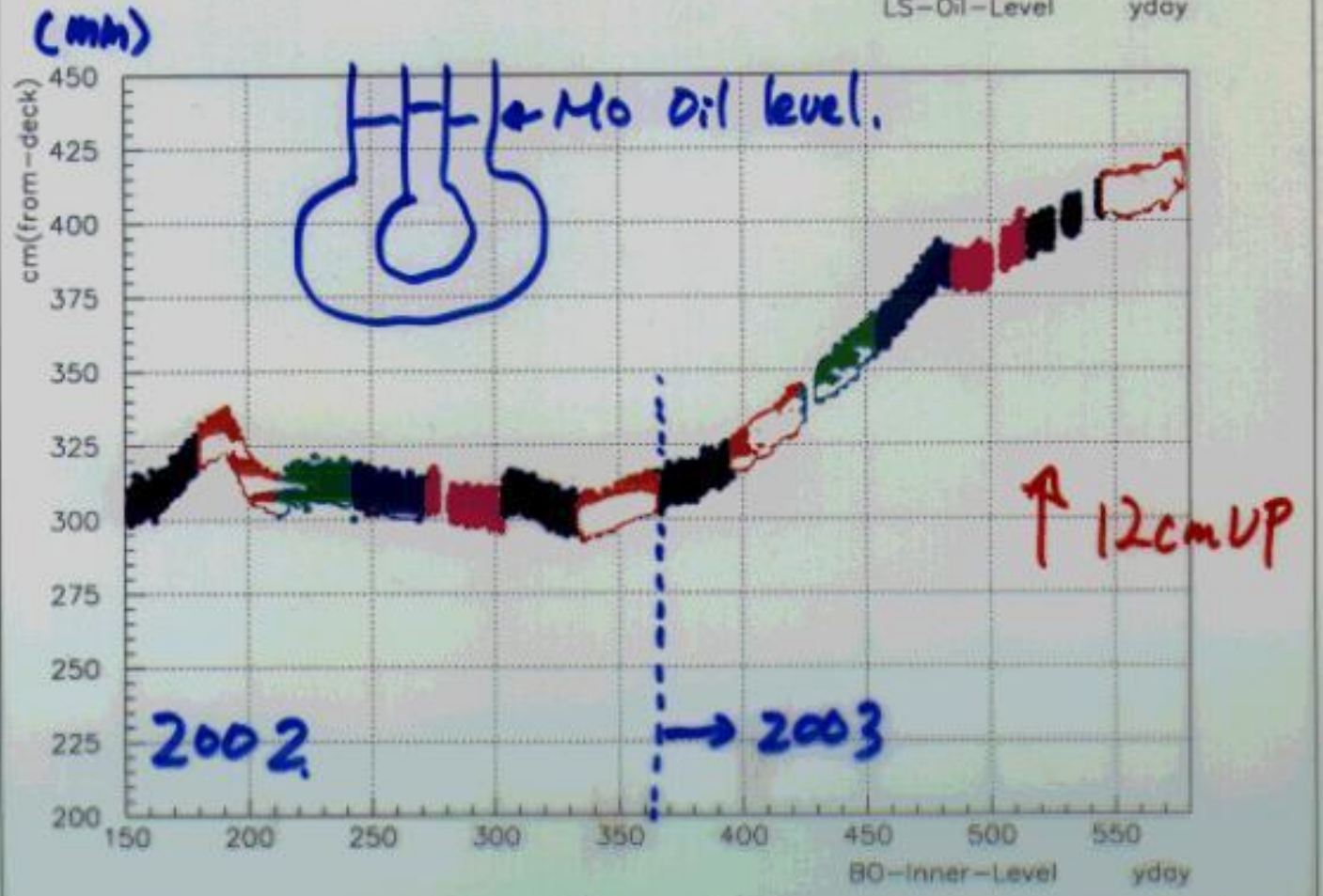

GUI Interface (Java)

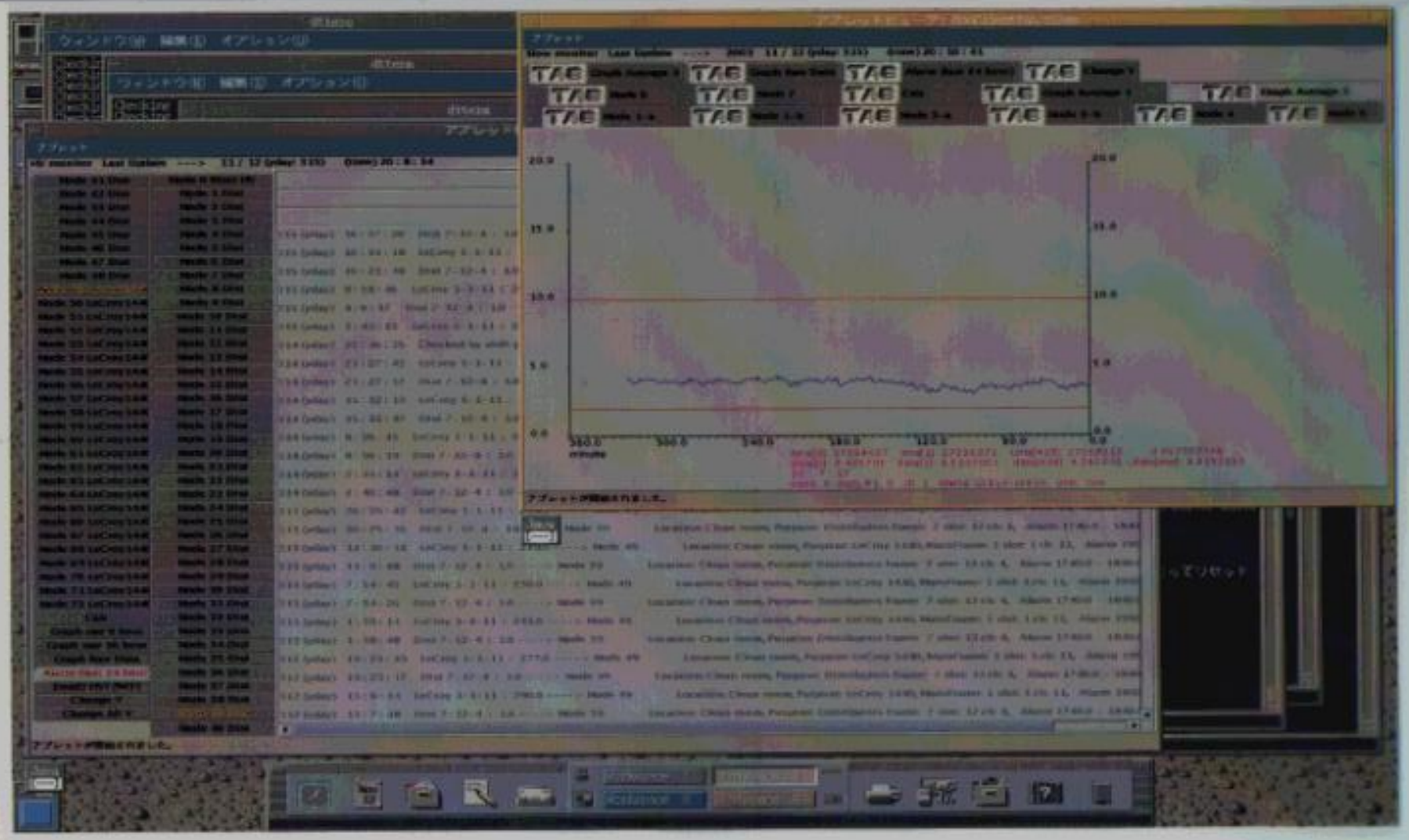

Solar Neutrino

- A large amount of background of Pb exists in the de tection energy area of 7Be at which we will aim in th e future.
  - Making of automatic detection system of density of r adon of experiment area
  - Radon free air is sent to the pit.
  - Removal of Pb in liquid scintillator
  - Establishment of measuring method of radon at sev eral 100μBq/m3 level.

Radio active Background in LS

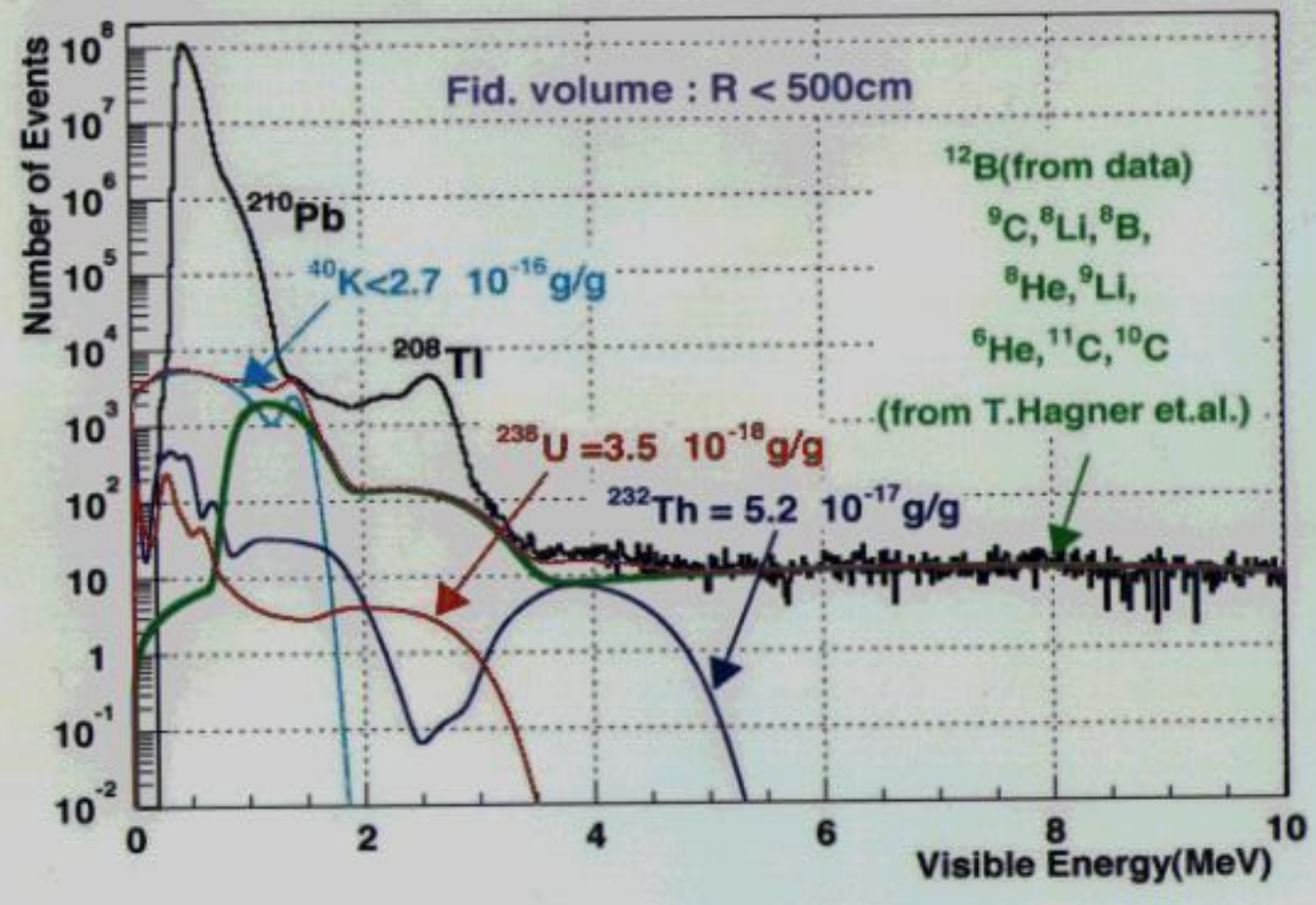

Solar Neutrino at KamLAND

First observation of real time ^{7}Be neutrinos

Background	Current	Goal	Method
^{238}U	3.5×10^{-18} g/g	OK	
^{232}Th	5.2×10^{-17} g/g	OK	
^{222}Rn	3.3×10^{-8} Bq/m^{-3}	OK	
^{40}K	$<2.7 \times 10^{-16}$ g/g	$<10^{-18}$ g/g	Water Extraction
^{210}Pb	$\sim 10^{-20}$ g/g	5×10^{-25} g/g	Water Extraction
^{85}Kr	0.7Bq/m^{-3}	10^{-6} Bq/m^{-3}	N_2 purge
^{222}Rn leak			N_2 purge/ air tight valves

KamLAND Solar

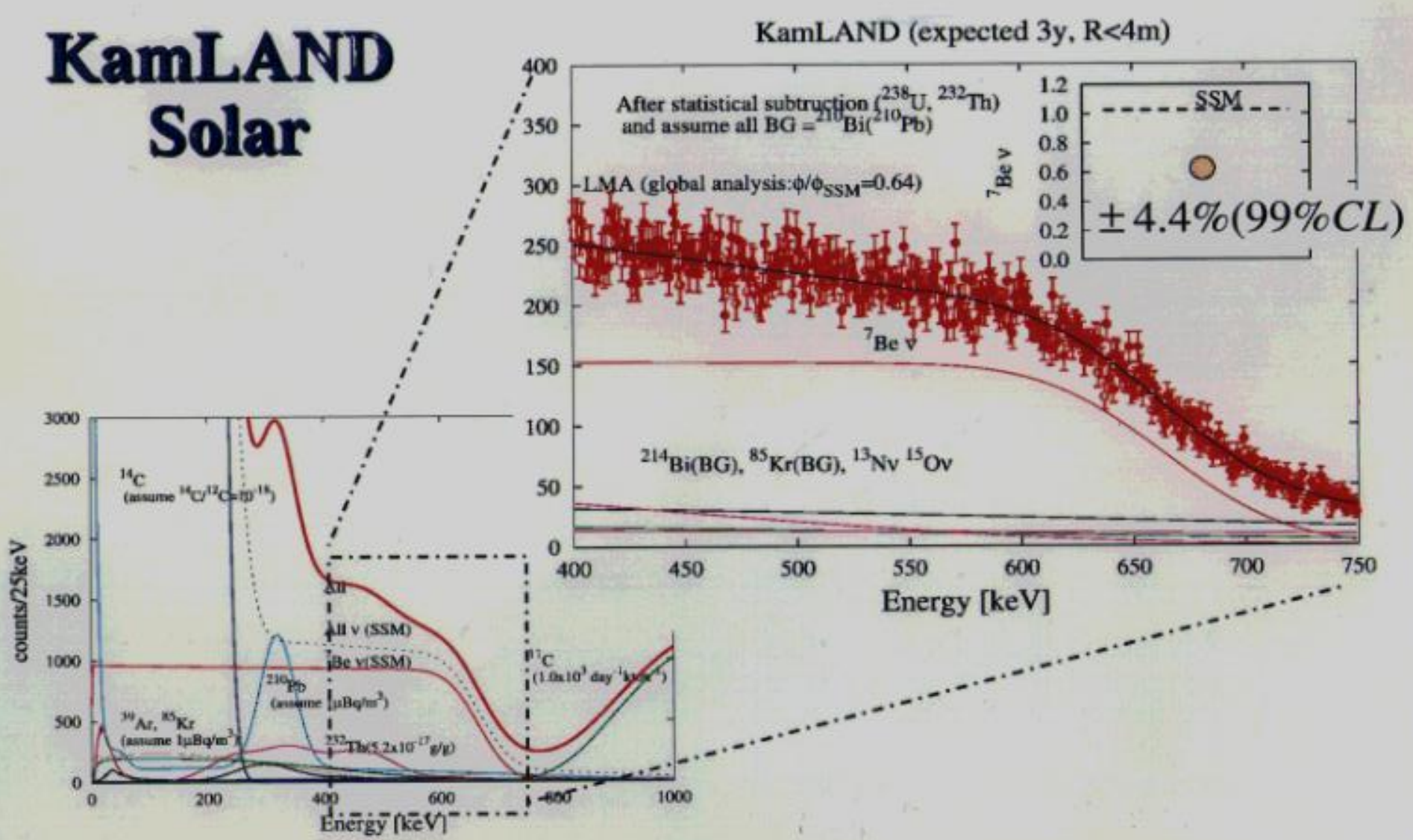

Rn Monitor Network (~ 10Bq/m3)

- These Pb is due to the invasion of Rn.
  - Therefore, the system which measured the Rn densi ty in the pit was constructed.
  - Requirements ：
    - Because there is a seasonal variation of the Rn density in the pit, it is necessary to measure Rn level online.
    - Because R&D continues, the extendibility should be eas y, and independent of a present system.

1-Wire(Dallas Semi.) Network

- The network is defined with an open deain (wired-A ND) master/slave multidrop architecture that uses a resistor pull-up to a nominal 5V supply at the maste r.
- A 1-Wire net consists of 3 main elements;
  - A bus master with controlling soft ware
  - The twisted pair wiring and associated connector
  - 1-Wire devices

1-Wire monitoring node

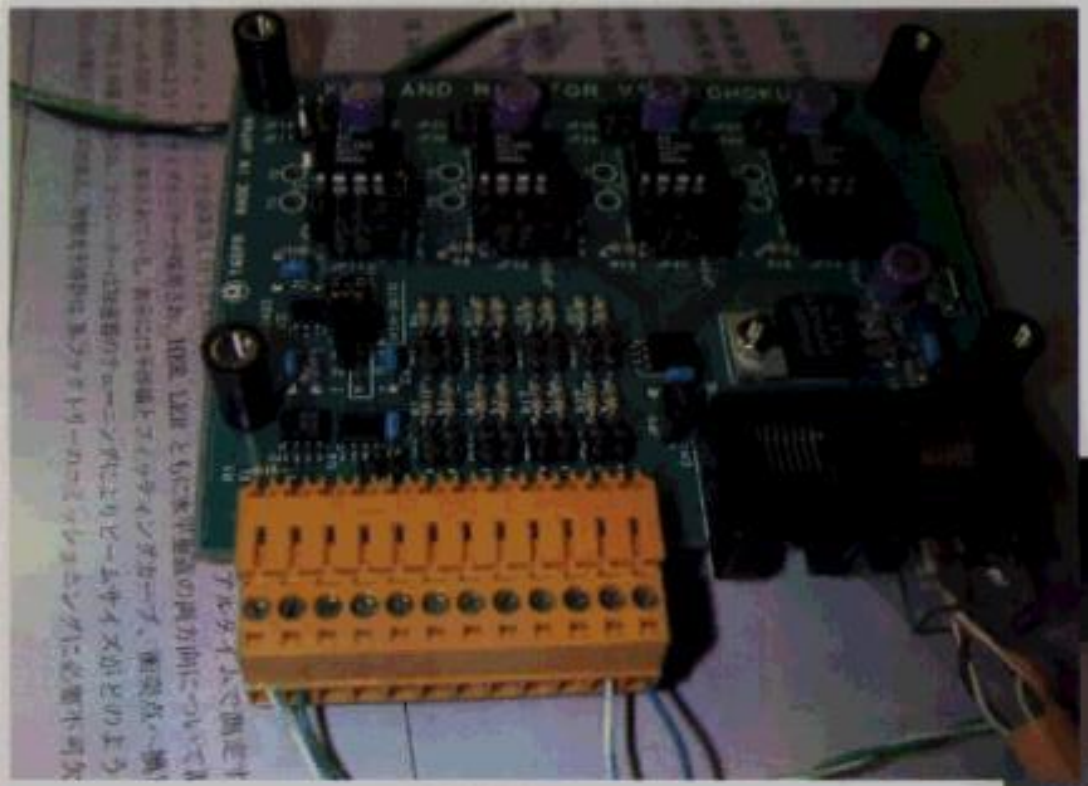

- 4-Inst. Amp-ADC
- Temperature,Humidity
- 1-Counter

Purification Area (Upper N2 Tank)

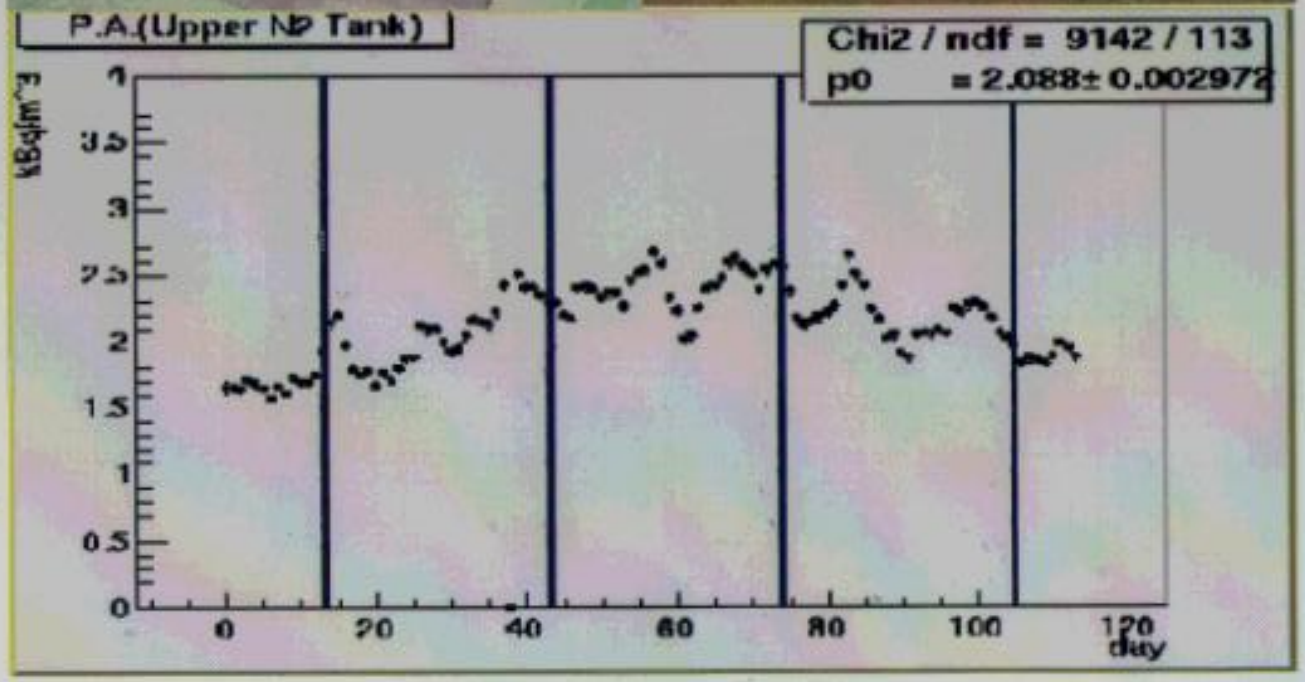

R&D High Sensitivity Rn Monitor (~ 100 μBq/m3)

- It is necessary to measure the Rn density before th e purified liquid scintillator is returned to the Detecto r.
- The demanded accuracy is -100μBq/m3 because it drops Pb to present 1/100.
- Therefore, the electrostatic collection method is use d.
- Developing SK type radon monitor

Schematic view of Rn monitor

HV (-6 kV)
and
Pre Amp.

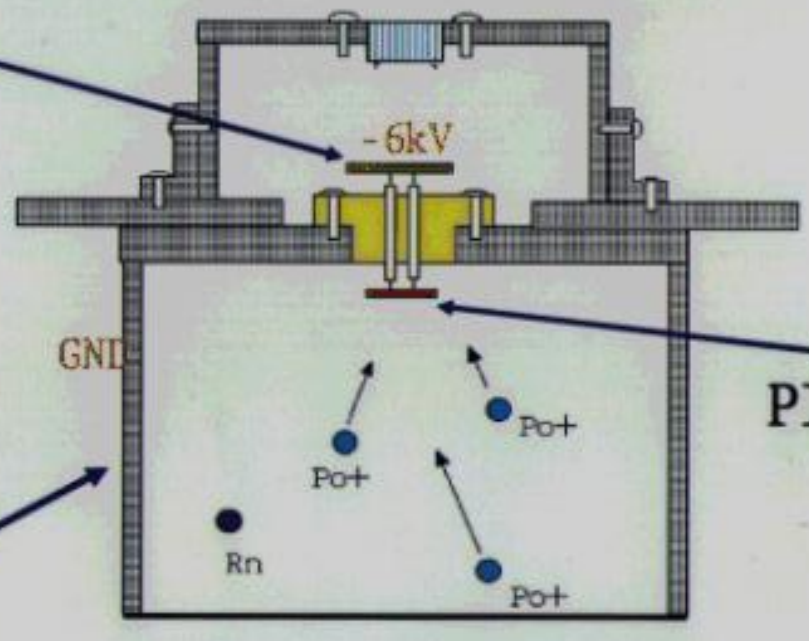

PIN photodiode

Electricalpolished(ECB) stainless steel vessel

Electropolished stainless steel vessel

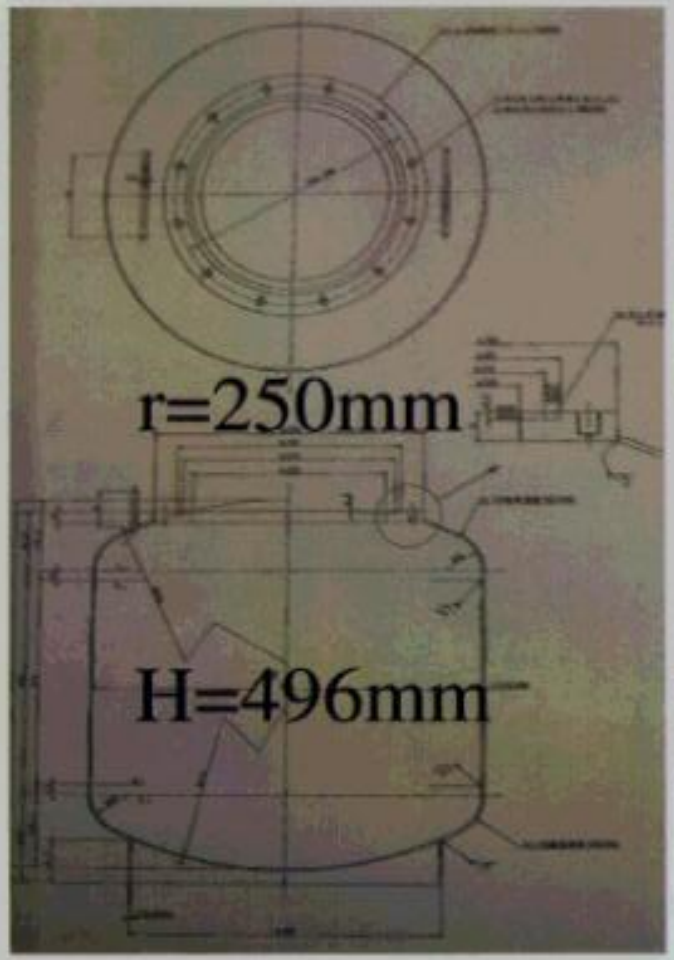

We made 100L test vessel.

In order to achieve a low Background level,
>>>>
the inside of the vessel is Electro-polished after welding.

Electro-Chemical Buffing

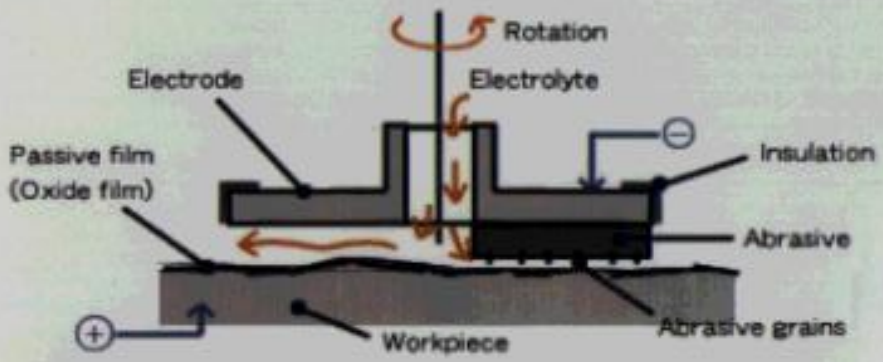

ECB is dual-action surface Finishing technology that Combines the power of Electrolytic metal dissolution And Mechanical polishing with Abrasive.

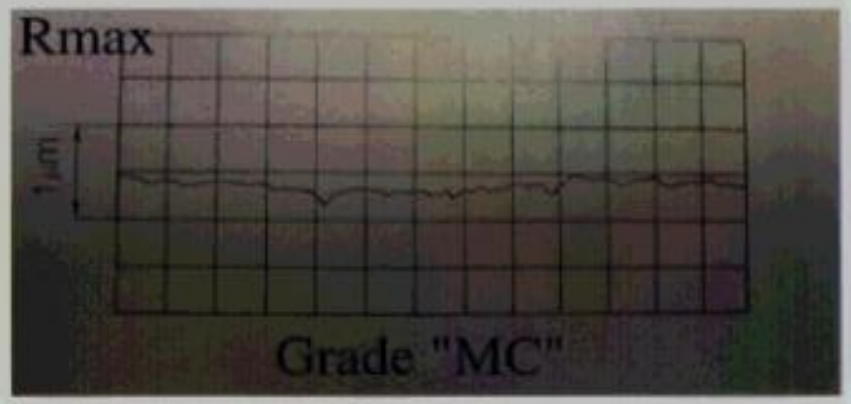

Flat surface

<<<

Mirror-smooth submicron finish

HV divider circuit

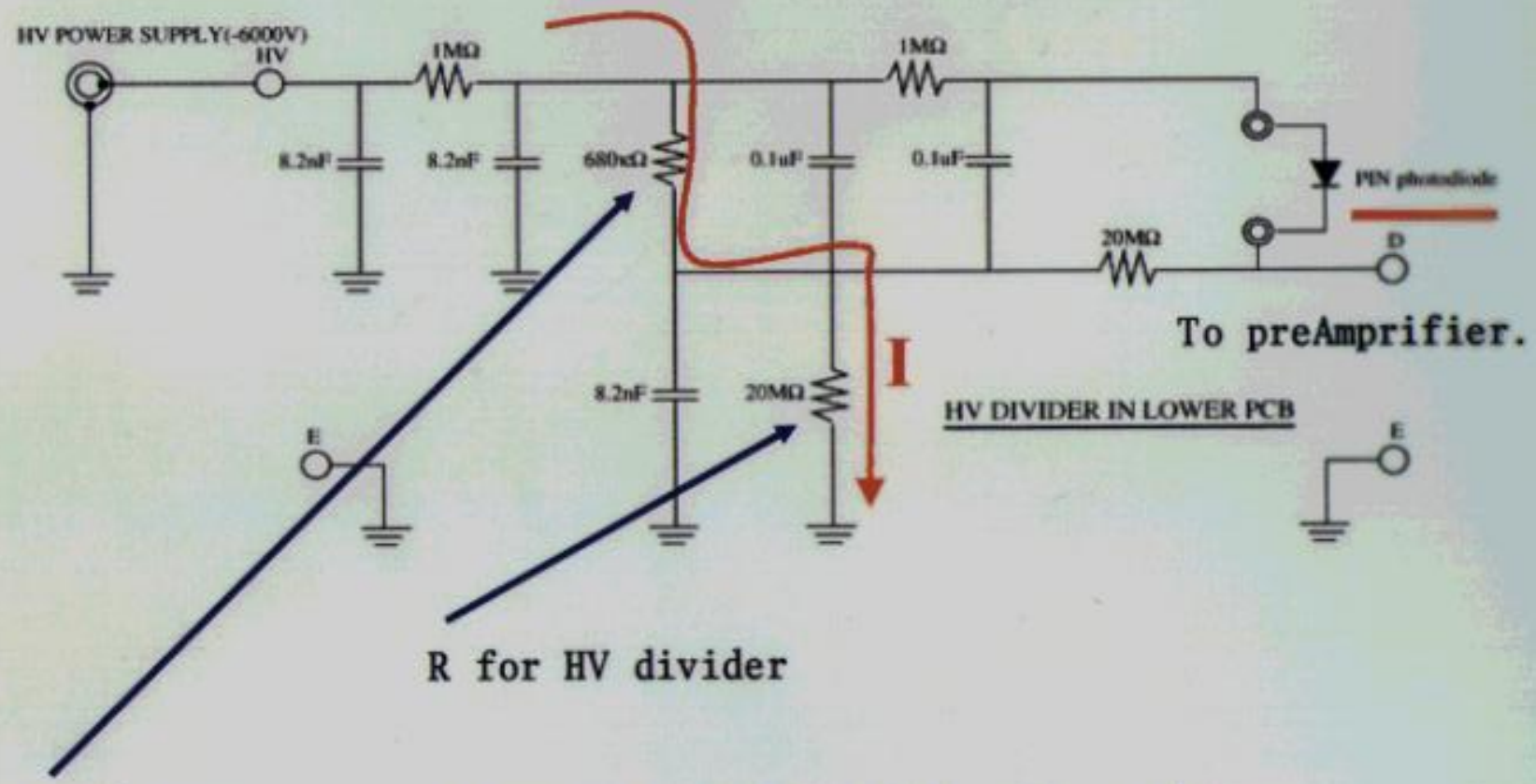

This R decides the Voltage of PIN photodiode (about 150V)

Preamplifier circuit

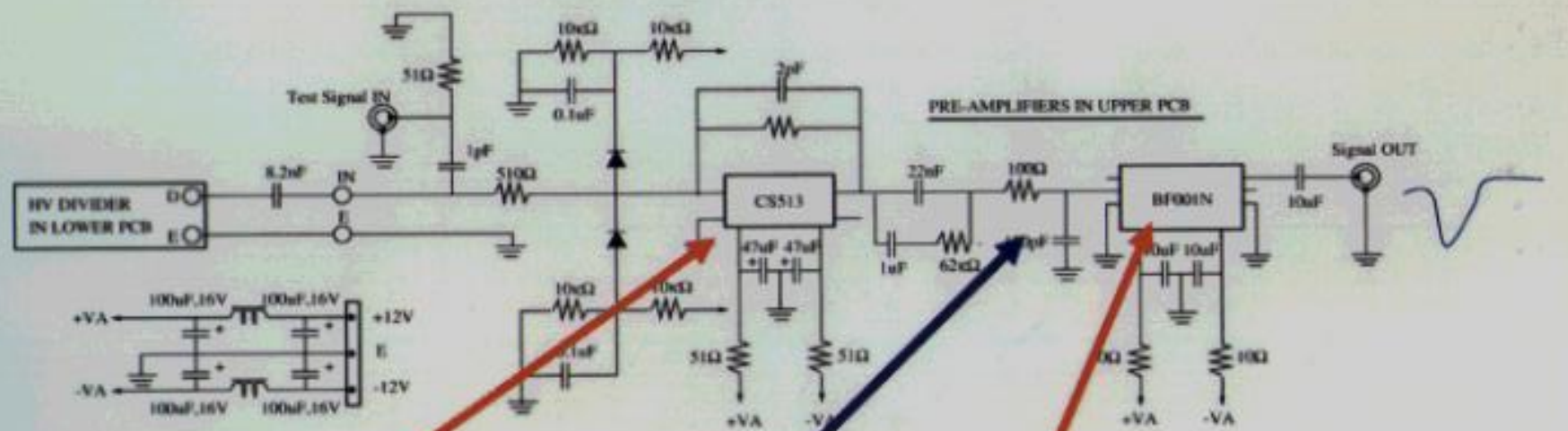

Charge amp: $\tau = 1.3$mS

Diff. circuit: $\tau = 50\,\mu$S

Drive amp.: Output impedance = 50 Ω

HV divider and PreAmp. circuit

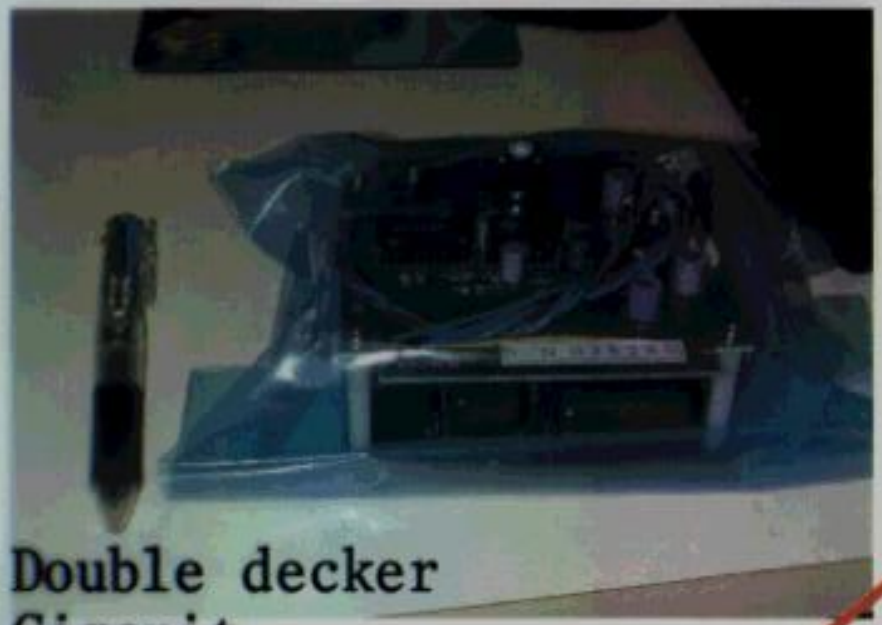

Double decker
Circuit.

PreAmp.

HV divider

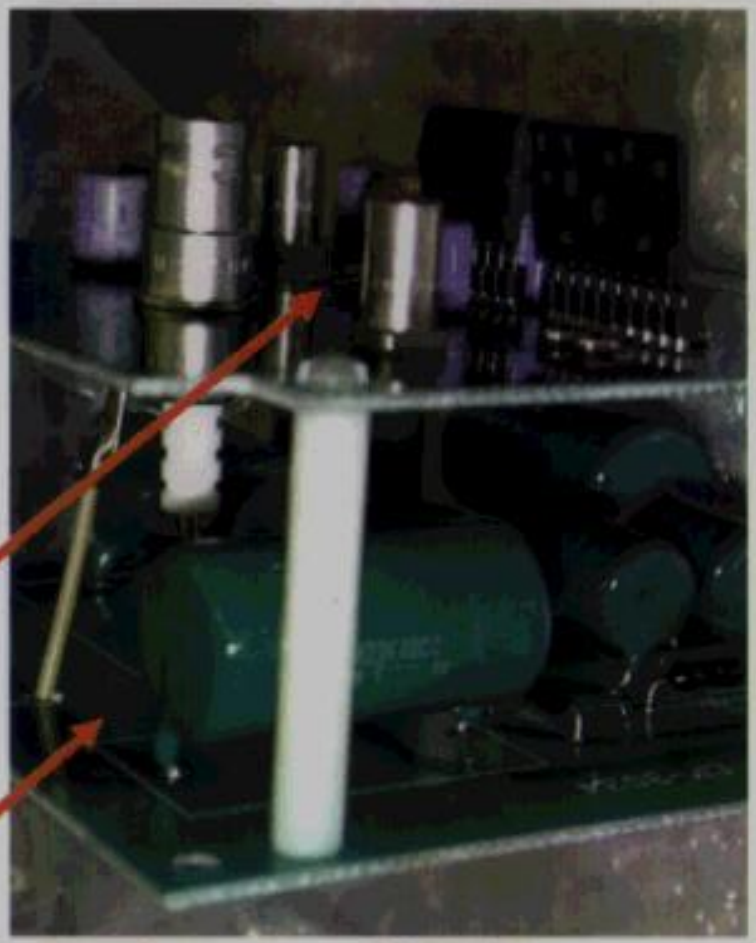

We are working on R&D (PD 2, Graduate student 2)

Experimental Data flow

- (1)Raw data ~160GB/day
  - That include trigger information and Wave form
  - 10bitsX128sample/channel
- Data Tape are sent to Sendai once a week.
- (2)After wave form analysis, the size down to ~1/15, ~12GB/day.
  - Reduced trigger information,
  - Time-charge for each PMT (64bits/channel)
- (3)In addition, After reconstruction process, the size down to ~1/120, ~100MB/day.
  - vertex,energy,muonID etc.

Experimental Data flow -feature-

- Data(3) for the analysis is automatically made by sh ell.
- All the data(2) are stored on HSM (~10TByte), then we can access all data easily.
- LTO Tape(100GByte) is sent by car because Kamio ka-Sendai is 10Mbps. But Kamioka-Sendai network will be improbed and we will be able to send data vi a network.

Summary

- The KamLAND LON monitoring system was constructed.
- Establishment of shift task.
  - >>KamLAND experiment (nuclear reactor anti-neutrino) star ted.
- The monitoring system of the density of the radon in the pit was constructed.
- The high sensitivity radon measuring detector is develope d.
  - >> Aiming at the Solar Neutrino detection experiment
- Experimental data process is done almost automatically.