The Simons Array in the Atacama

An expansion of the currently observing Polarbear project

Kam Arnold, Simons Array Project Manager

University of California, San Diego

POLARBEAR / Simons Array Collaboration

University of California, Berkeley
Ari Cukierman
William Holzapfel
Adrian Lee
Mike Myers
Christian Reichardt
Paul Richards
Bryan Steinbach
Aritoki Suzuki
Oliver Zahn

McGill University
Matt Dobbs

Princeton University
Zigmund Kermish
Blake Sherwin

Austin College
Peter Hyland

Pontifica Universidad Catolica
Rolando Dunner

Lawrence Berkeley National Lab.
Julian Borrill
Josquin Errard
Theodore Kisner
Reijo Keskitalo
Eric Linder
Mike Sholl

University of Colorado, Boulder
Nils Halverson
Greg Jaehnig

Laboratoire Astroparticule & Cosmologie
Giulio Fabbian
Maude LeJeune
Julien Peloton
Radek Stompor

Dalhousie University
Scott Chapman
Colin Ross
Kaja Rotermund
Peter Smith

University of California, San Diego
Kam Arnold
Darcy Barron
David Boettger
Tucker Elleflot
Chang Feng
George Fuller
Brian Keating
Frederick Matsuda
Stephanie Moyerman
Marty Navaroli
Hans Paar
Praween Siritanasak
Nathan Stebor
Amit Yadav

Goddard Space Flight Center
Nathan Miller

Cardiff University
Peter Ade
William Grainger

Imperial College
Andrew Jaffe

KEK
Yoshiki Akiba
Yuji Chinone
Masaya Hasegawa
Kaori Hattori
Masashi Hazumi
Yuki Inoue
Yuta Kaneko
Nobuhiro Kimura
Tomotake Matsumura
Hideki Morii
Takahiro Okamura
Akie Shimizu
Jun-ichi Suzuki
Satoru Takakura
Ken-ichi Tanaka
Takayuki Tomaru

Kavli IPMU
Nobuhiko Katayama
Haruki Nishino

National Institute for Fusion Science
Suguru Takada

POLARBEAR / Simons Array Collaboration

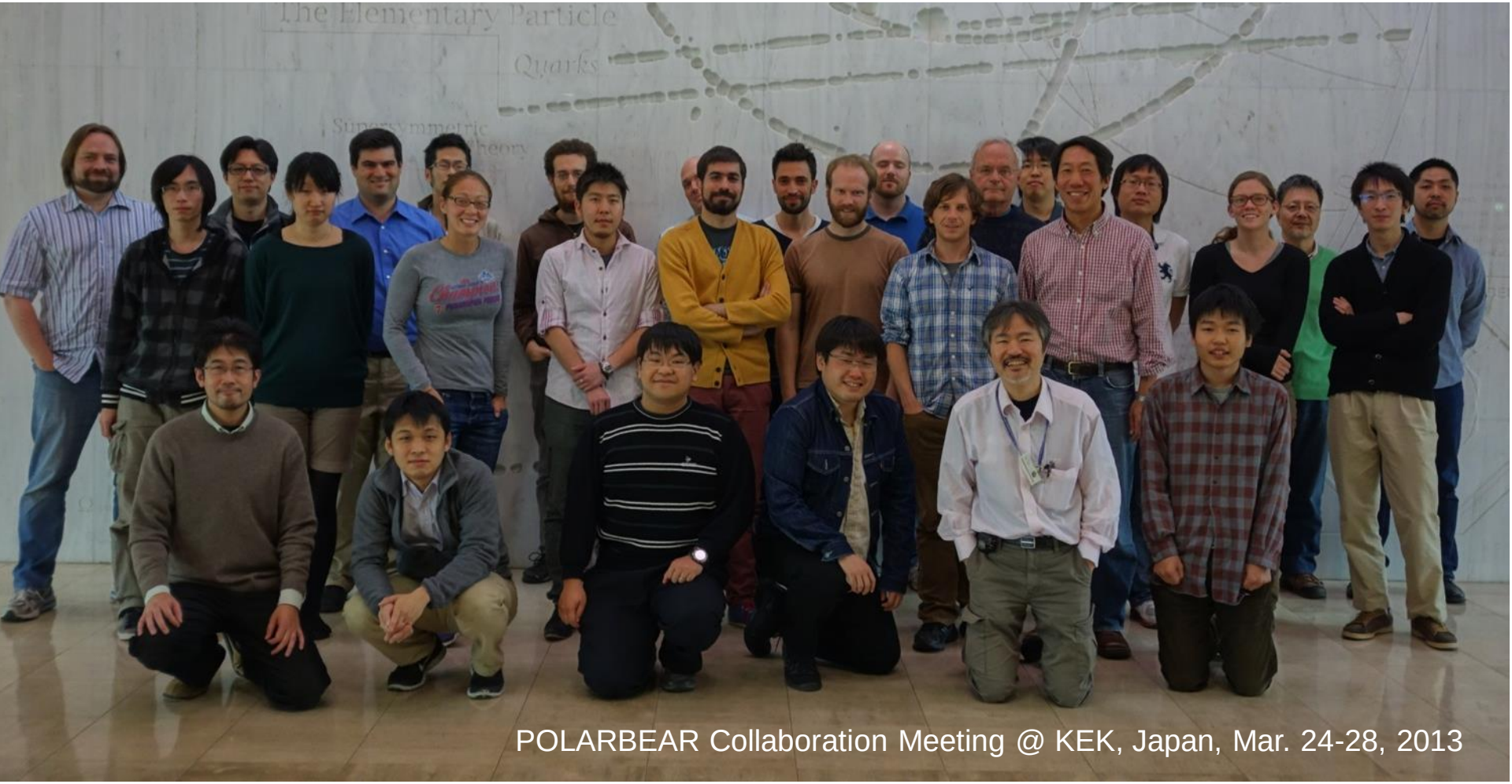

POLARBEAR Collaboration Meeting @ KEK, Japan, Mar. 24-28, 2013

SIMONS FOUNDATION

National Science Foundation
WHERE DISCOVERIES BEGIN

MEXT MINISTRY OF EDUCATION, CULTURE, SPORTS, SCIENCE AND TECHNOLOGY-JAPAN

CONICYT COMISIÓN NACIONAL DE INVESTIGACIÓN CIENTÍFICA Y TECNOLÓGICA

Simons Array Goals & Requirements

- Goal: Rapidly develop to the next step in scientific capability:
  - Inflationary gravitational waves
  - Lensing by large scale structure
  - Primordial magnetic fields and parity-breaking physics (i.e., Chern-Simons)
- Requirements:
  - High sensitivity over ℓ-range of signal
  - Spectral information to characterize and remove astrophysical foreground signals
  - Stringent control of instrumental systematic errors

Simons Array Plan

Leverage POLARBEAR experience to rapidly increase sensitivity

2013-2014: Construct two more telescopes

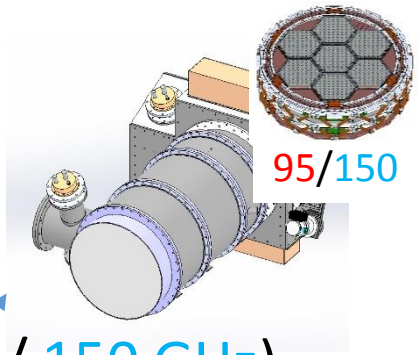

2014: POLARBEAR-2 (95 GHz / 150 GHz) deploys onto new telescope

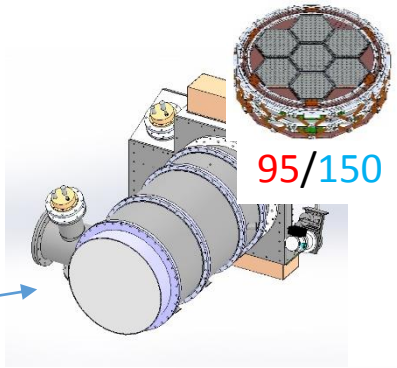

2015: A copy of POLARBEAR -2 deploys onto new telescope

2016: A 150 GHz / 220 GHz receiver replaces POLARBEAR-1 on the original telescope

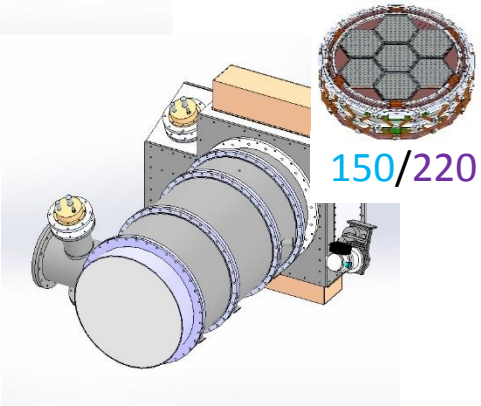

3 receivers (22,764 bolometers) observing at 95,150,220 GHz

Scientific capabilities – instrument parameters

Frequency channel (GHz)	Number of bolometers	NET per bolometer ($\mu K_{cmb}\sqrt{s}$)	Beam FWHM (arcmin)
95	7,588	500	5.2
150	11,382	500	3.5
220	3,794	550	2.7

Array instantaneous sensitivity: 3.4 $\mu K_{cmb}\sqrt{s}$

Scientific capabilities – sensitivity to polarization power spectra

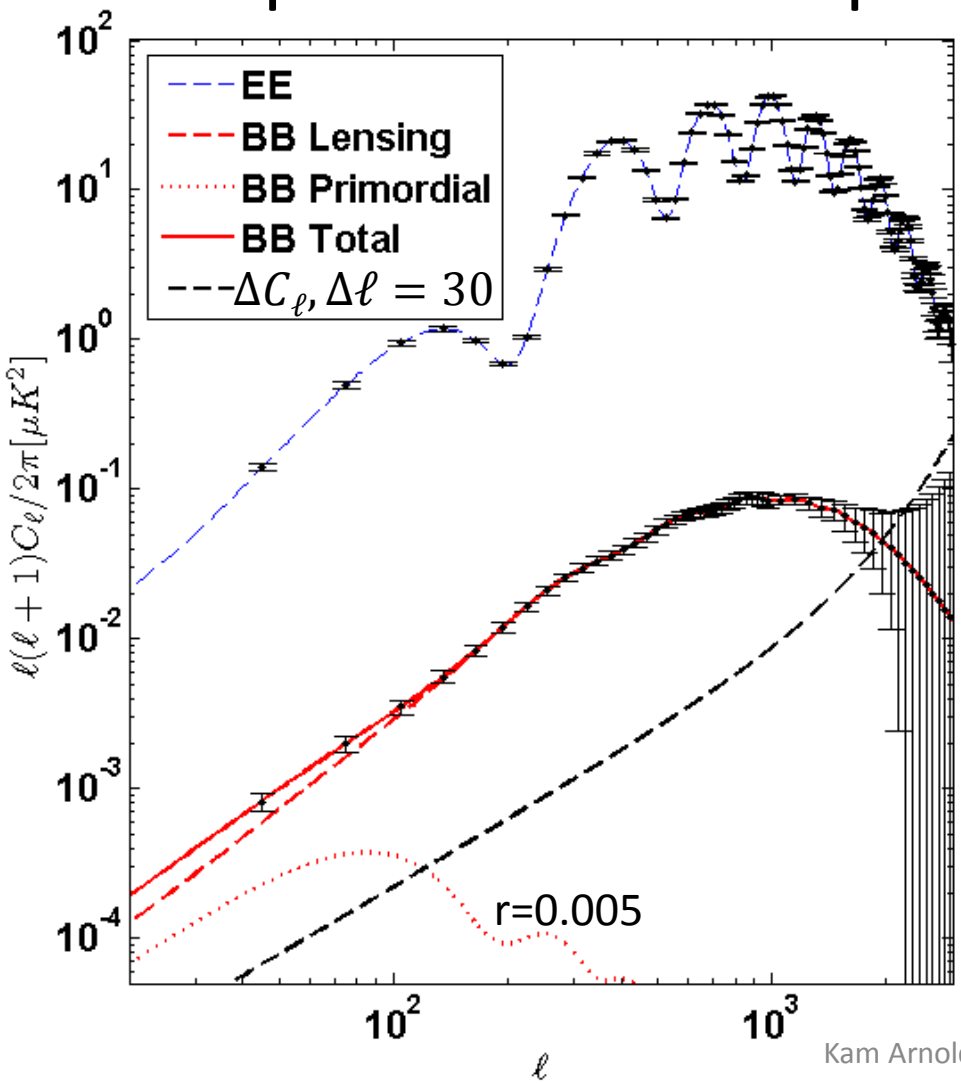

Assumed observation parameters:

Years of observation:	3
Sky fraction f_{sky}:	0.20
Polarization map depth ($\mu K \cdot arcmin$):	6.3

Scientific capabilities – cosmological parameter constraints

Sum of neutrino masses:

$$\sigma(\Sigma m_\nu) = 0.06\ eV$$

- Larger f_{sky} would better constrain neutrinos
- Consider high-ℓ polarized foregrounds

Tensor/scalar ratio r:

f_{sky}	% delensing assumed	r detection at 2σ
0.20	10	3.1×10^{-3}
0.08	10	3.3×10^{-3}
0.20	80	2.3×10^{-3}
0.08	80	1.9×10^{-3}

Planck polarized foreground results will guide Simons Array sky selection

Scientific capabilities – cosmological parameter constraints

Primordial magnetic fields

- Constrain fields during last scattering at the μGauss level
  - Pogosian *et al.*, Phys Rev. D, 2011
  - Yadav *et al.*, Phys Rev. D, 2012

Parity-breaking physics

- Constrain chiral gravity by comparing TB and BB power spectra
  - Contaldi *et al.*, Phys. Rev. Lett., 2008
- Constrain chiral E&M
  - CMB detection claim:
    - Xia *et al.*, Phys Lett. B, 2010,
    - Xia *et al.*, JCAP, 2012

In Summary…

- The Simons Array is a funded expansion of POLARBEAR to three multichroic instruments
- The Simons Array will be fully deployed in 2016
- The Simons Array will:
  - Detect a tensor/scalar ratio greater than 3×10^{-3}
  - Extend Planck's relic neutrino mass constraint to $\sigma(M_\nu) = 0.06\ eV$
  - Constrain the symmetry properties of gravity and E&M